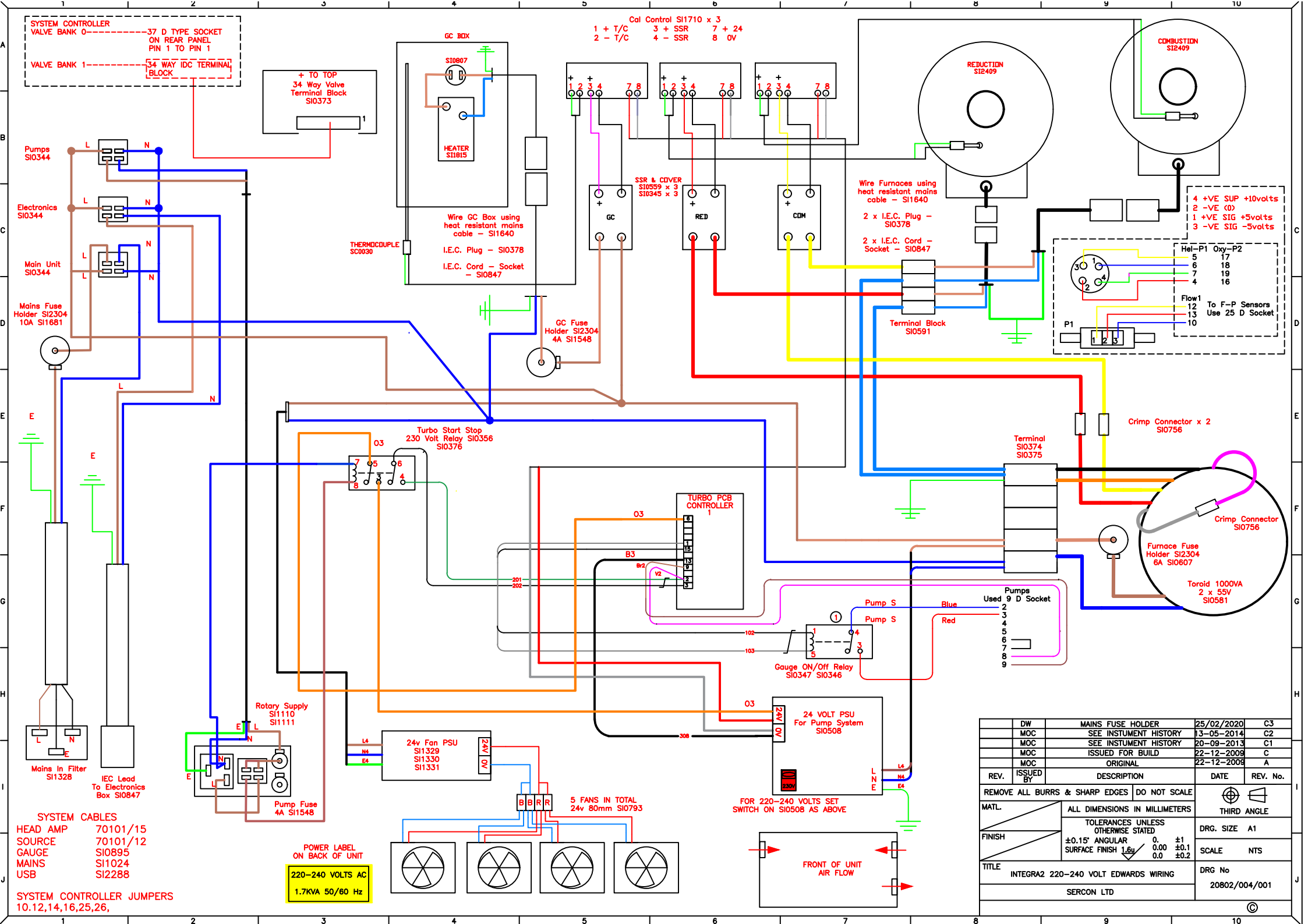
SYSTEM CONTROLLER
VALVE BANK 0----------37 D TYPE SOCKET ON REAR PANEL PIN 1 TO PIN 1
VALVE BANK 1----------34 WAY IDC TERMINAL BLOCK
+ TO TOP 34 Way Valve Terminal Block SI0373
GC BOX
SI0807
HEATER SI1815
Cal Control SI1710 x 3
1 + T/C 3 + SSR 7 + 24
2 - T/C 4 - SSR 8 0V
REDUCTION SI2409
COMBUSTION SI2409
Pumps SI0344
Electronics SI0344
Main Unit SI0344
Mains Fuse Holder SI2304 10A SI1681
THERMOCOUPLE SC0030
Wire GC Box using heat resistant mains cable - SI1640
I.E.C. Plug - SI0378
I.E.C. Cord - Socket - SI0847
SSR & COVER SI0559 x 3 SI0345 x 3
GC
RED
COM
Wire Furnaces using heat resistant mains cable - SI1640
2 x I.E.C. Plug - SI0378
2 x I.E.C. Cord - Socket - SI0847
Terminal Block SI0591
4 +VE SUP +10volts
2 -VE (0)
1 +VE SIG +5volts
3 -VE SIG -5volts
Hel-P1 Oxy-P2
5 17
6 18
7 19
4 16
Flow1
12
13
10
To F-P Sensors Use 25 D Socket
P1
GC Fuse Holder SI2304 4A SI1548
Turbo Start Stop 230 Volt Relay SI0356 SI0376
Crimp Connector x 2 SI0756
Terminal SI0374 SI0375
Crimp Connector SI0756
Furnace Fuse Holder SI2304 6A SI0607
Toroid 1000VA 2 x 55V SI0581
TURBO PCB CONTROLLER 1
Pump S
Pump S
Blue
Red
Pumps Used 9 D Socket
Gauge ON/Off Relay SI0347 SI0346
Rotary Supply SI1110 SI1111
Pump Fuse 4A SI1548
24v Fan PSU SI1329 SI1330 SI1331
24 VOLT PSU For Pump System SI0508
FOR 220-240 VOLTS SET SWITCH ON SI0508 AS ABOVE
5 FANS IN TOTAL 24v 80mm SI0793
FRONT OF UNIT AIR FLOW
Mains In Filter SI1328
IEC Lead To Electronics Box SI0847
SYSTEM CABLES
HEAD AMP 70101/15
SOURCE 70101/12
GAUGE SI0895
MAINS SI1024
USB SI2288
SYSTEM CONTROLLER JUMPERS
10,12,14,16,25,26,
POWER LABEL ON BACK OF UNIT
220-240 VOLTS AC
1.7KVA 50/60 Hz
MAINS FUSE HOLDER 25/02/2020 C3
SEE INSTUMENT HISTORY 13-05-2014 C2
SEE INSTUMENT HISTORY 20-09-2013 C1
ISSUED FOR BUILD 22-12-2009 C
ORIGINAL 22-12-2009 A
REV. ISSUED BY DESCRIPTION DATE REV. No.
REMOVE ALL BURRS & SHARP EDGES DO NOT SCALE
MATL.
FINISH
ALL DIMENSIONS IN MILLIMETERS
TOLERANCES UNLESS OTHERWISE STATED
±0.15° ANGULAR 0. ±1
SURFACE FINISH 1.6µ 0.00 ±0.1
0.0 ±0.2
THIRD ANGLE
DRG. SIZE A1
SCALE NTS
TITLE
INTEGRA2 220-240 VOLT EDWARDS WIRING
SERCON LTD
DRG No
20802/004/001
©